W15I77T-CHA2 15.6" Panel PC (Intel® core 2 Quad/core 2 Duo/celeron M+GME platform)

Mechanical Design

Chassis

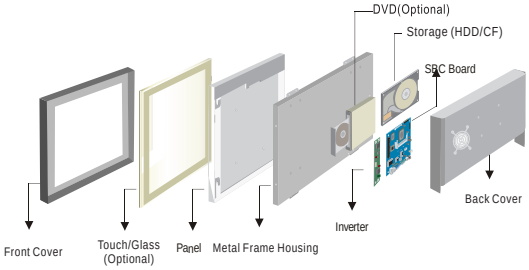

Mechnical desing

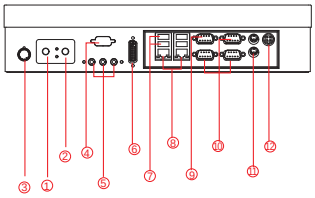

1. Brightness Adjustment
2. Knob Power On Button
3. Power Reset Button
4. RS-232 Conn.(Optional)
5. Audio Jack
6. DVI (Optional)
7. USB
8. RJ-45
9. VGA Out
10. RS-232 Conn.
11. PS/2
12. DC-IN Power Jack

Fully Integrated I/O

Dimensions

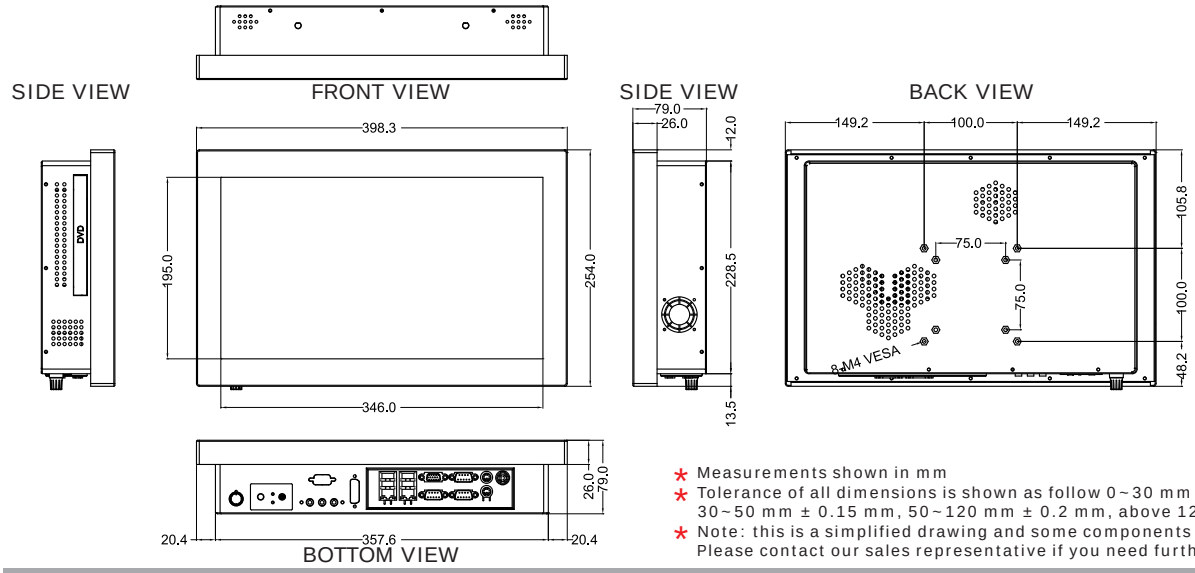

* Measurements shown in mm
* Tolerance of all dimensions is shown as follow 0~30 mm ± 0.1 mm, 30~50 mm ± 0.15 mm, 50~120 mm ± 0.2 mm, above 120 mm ± 0.25 mm
* Note: this is a simplified drawing and some components are not marked in detail. Please contact our sales representative if you need further product information.

Specifications

System :

- CPU : Intel® Core 2 Quad/Core 2 Duo Processor
- Memory Slot : 2 x DIMM, Max 4GB DDR2 667/800
- System Chipset : Intel® GM45 / ICH9M-E Chipset
- IDE/SATA : 1 x 44pin IDE (UDMA 33/66/100)/3 x SATA
- LAN : Dual Realtek RTL8111B Ethrnet
- Audio Codec : VIA VT1708A codec

Input / Output :

- Serial Ports : 2 x RS232,● 1 x RS232/422/485
- USB Ports : 4 x USB
- Keyboard / Mouse : 2 x PS/2
- Ethernet : 2 x RJ 45-10/100/1000 Mbps
- VGA : 1 x VGA (female)
- Audio : Line-Out, Line-In, Mic in

● Default setting:RS232

Power Specifications :

- Power Input : 12V DC IN (Lockable Power Jack)
- Power Consumption : 85W (typ.)(Max.backlight & high CPU load)

Accessories :

- External Adapter : 110~230V Ac-in power adapter

Panel Spec :

- Size/Type : 15.6" TFT LCD
- Resolutions : 1366 x 768
- Brightness : 300 cd/m² (typ.)
- Contrast Ratio : 500 : 1(typ.)
- Viewing Angles : -85~85(H);-80~80(V)
- Max Colors : 16.7M (6bits+FRC)

Environment Considerations :

- Operating Temperature : 0 deg.C to 50deg.C
- Operating Humidity : 30% to 90% (non condensing)

OS BSP / Driver Support :

- Support Windows 7 / Windows XP Embedded / Windows XPP Embedded / Linux 2.6 / Win CE 5.0,6.0

Order Options :

Mechanical :	Open Frame Panel Mount(5mm bezel) IP65(10mm bezel) Chassis	Storage	: 3.5" HDD/CF/Both
		RAM	: DIMM DDR2 667/800
		OS	: Windows XPE(Optional) Windows XPPE (Optional)
Touch	: 5 Wires Resistive(Optional) (A customized housing is needed if you have demands of SAW/IR/SC/IT touch)	DVD	: Yes(Optional)

Rev.	Reasons	Revised Date
1.0	First release	Dec-31-10
1.1	Spec change	Jan-16-13